Concealed Hinge 2410/2411

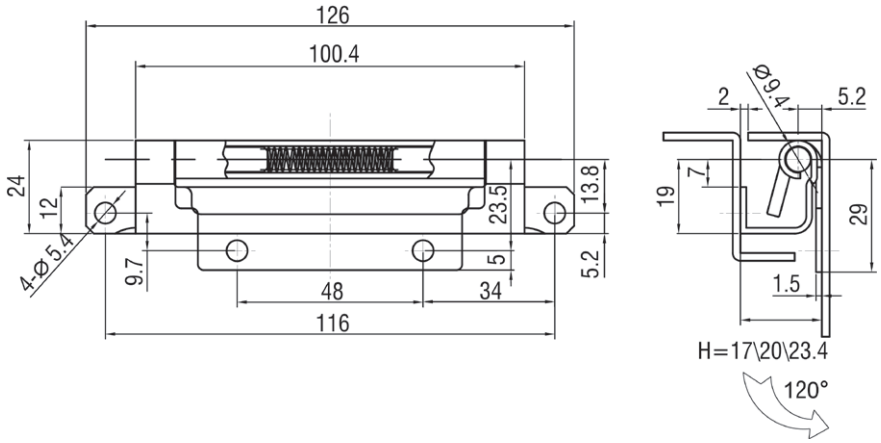

Mild steel zinc plated or SS304.

Height	SS304	Steel
H=17	2410-17-304	2410-17-01
H=20	2410-20-304	2410-20-01
H=23.4	2410-234-304	2410-234-01

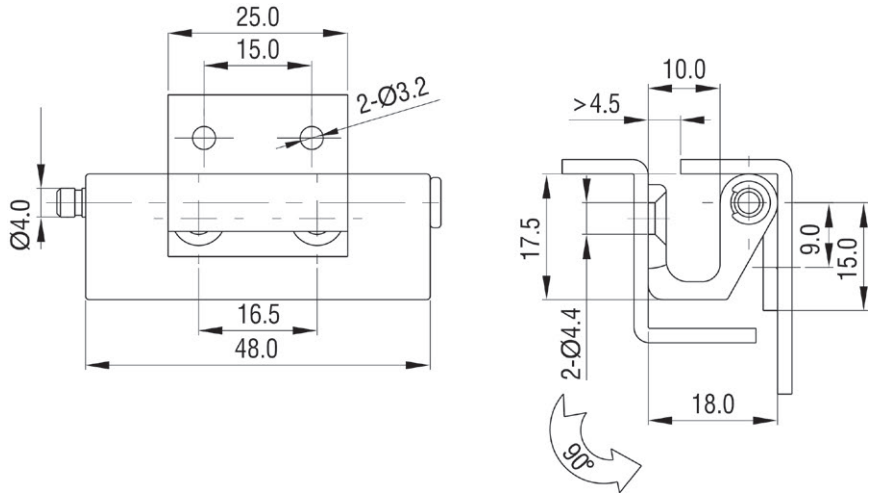

Zinc die, sand blasted, nickel plated, mild steel zinc plated, stainless steel pin.

Product Code	2411-02-78